Алматы (7273)495-231
Ангарск (3955)60-70-56
Архангельск (8182)63-90-72
Астрахань (8512)99-46-04
Барнаул (3852)73-04-60
Белгород (4722)40-23-64
Благовещенск (4162)22-76-07
Брянск (4832)59-03-52
Владивосток (423)249-28-31
Владикавказ (8672)28-90-48
Владимир (4922)49-43-18
Волгоград (844)278-03-48
Вологда (8172)26-41-59
Воронеж (473)204-51-73
Екатеринбург (343)384-55-89
Иваново (4932)77-34-06
Ижевск (3412)26-03-58
Иркутск (395)279-98-46
Казань (843)206-01-48
Калининград (4012)72-03-81
Калуга (4842)92-23-67
Кемерово (3842)65-04-62
Киров (8332)68-02-04
Коломна (4966)23-41-49
Кострома (4942)77-07-48
Краснодар (861)203-40-90
Красноярск (391)204-63-61
Курск (4712)77-13-04
Курган (3522)50-90-47
Липецк (4742)52-20-81
Магнитогорск (3519)55-03-13
Москва (495)268-04-70
Мурманск (8152)59-64-93
Набережные Челны (8552)20-53-41
Нижний Новгород (831)429-08-12
Новокузнецк (3843)20-46-81
Ноябрьск (3496)41-32-12
Новосибирск (383)227-86-73
Омск (3812)21-46-40
Орел (4862)44-53-42
Оренбург (3532)37-68-04
Пенза (8412)22-31-16
Петрозаводск (8142)55-98-37
Псков (8112)59-10-37
Пермь (342)205-81-47
Ростов-на-Дону (863)308-18-15
Рязань (4912)46-61-64
Самара (846)206-03-16
Саранск (8342)22-96-24
Санкт-Петербург (812)309-46-40
Саратов (845)249-38-78
Севастополь (8692)22-31-93
Симферополь (3652)67-13-56
Смоленск (4812)29-41-54
Сочи (862)225-72-31
Ставрополь (8652)20-65-13
Сургут (3462)77-98-35
Сыктывкар (8212)25-95-17
Тамбов (4752)50-40-97
Тверь (4822)63-31-35
Тольятти (8482)63-91-07
Томск (3822)98-41-53
Тула (4872)33-79-87
Тюмень (3452)66-21-18
Ульяновск (8422)24-23-59
Улан-Удэ (3012)59-97-51
Уфа (347)229-48-12
Хабаровск (4212)92-98-04
Чебоксары (8352)28-53-07
Челябинск (351)202-03-61
Череповец (8202)49-02-64
Чита (3022)38-34-83
Якутск (4112)23-90-97
Ярославль (4852)69-52-93

Россия +7(495)268-04-70
Казахстан +7(7172)727-132
Киргизия +996(312)96-26-47

www.delta-mobrey.nt-rt.ru || dye@nt-rt.ru

Технические характеристики на датчики уровня и расхода, ультразвуковые датчики DMSP, DSGE компании Delta Mobrey

Technical **Datasheet**

delta-mobrey

Ultrasonic Transmitters

Liquid Level & Flow Measurement

Series: DMSP900

Key **Features**

- Non-contacting measurement with no moving parts
- Continuous measurement of Level, Contents, or Open Channel Flow
- Simple to install and configure via Delta Mobrey's DMCU900 HART® controller or other HART master
- Loop powered 4-20mA and HART® output
- Configure to ignore disturbing object false echo
- Factory sealed IP68
- Rugged PVDF construction ideal for applications on exposed sites

Series **Overview**

The DMSP900SH for level, contents and open channel flow uses ultrasonic technology.

Ultrasonic pulses are transmitted to and reflected from the liquid surface. The transmitter measures the 'time-of-flight' and determines the distance to the surface. By configuring the distance to the bottom of a vessel, the transmitter can then calculate the liquid level and contents (volume) for linear or non-linear vessels (domed, spherical, etc). For open channel flow, the transmitter can calculate the flow rate from the level for a wide variety of flumes and weirs.

An internal temperature sensor compensates for temperature affects. The level, contents or flow measurement is transmitted through the 4–20 mA and HART output. If used with the DMCU900 HART® controller, this simplifies configuration and has local display

Product **applications**

- Level or contents measurement in storage tanks
- Level measurement and pump control for wet wells and pumping stations
- Pump control for feeder tanks
- High or low level alarms in storage tanks
- Small or thin wall tanks
- Bund level measurement
- Open channel flow
- Chemical or Hydrocarbon storage tanks
- Differential measurement by two transmitters for blocked filter detection

Other products

Other products we can offer :

- Ultrasonic level transmitters with display
- Control unit for configuration, display and pump control
- Submergible type level transmitters

How to order

Transmitters can be configured by selecting codes representing the desired features from the tables that follow.

The chart below, describes how the model code is built up. For assistance in configuring a transmitter that best suits your needs, please contact your local sales office.

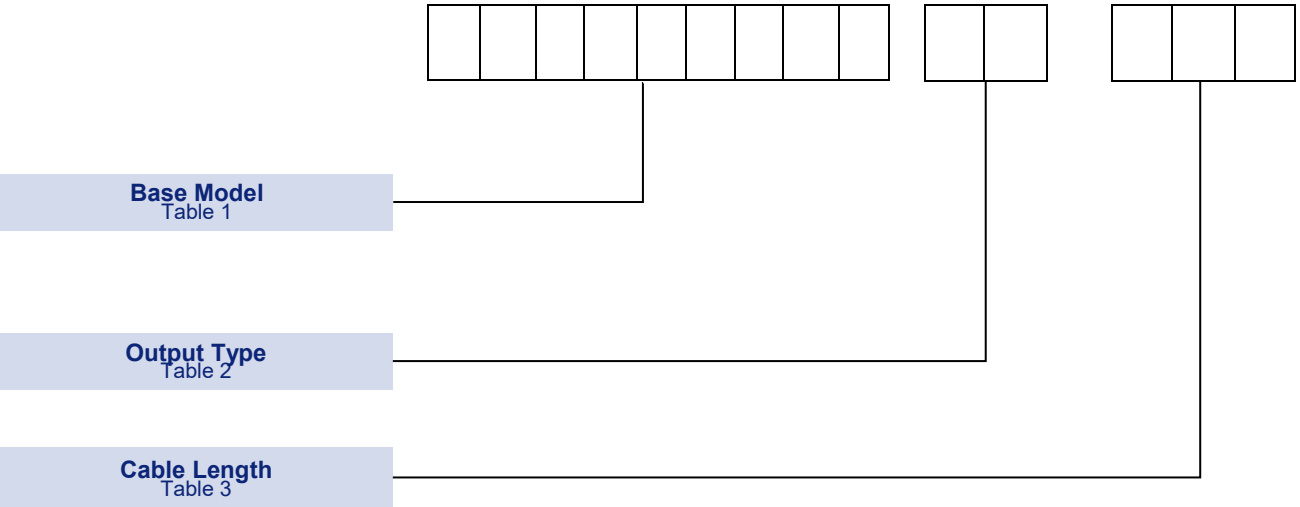

Models

TABLE 1

	All models are capable of giving Level, Contents and Open Channel Flow	Code
Standard sensor. Range up to 6m	**Range 0.25 to 6 mt. Process connections 1" BSP upper, 2" BSP lower.** PVDF, with weather protection IP68, cable length as required (see table 3).	**DMSP900SH**
Standard sensor. Range up to 6m	**Range 0.25 to 6 mt. Process connections 1" BSP upper, 2" NPT lower.** PVDF, with weather protection IP68, cable length as required (see table 3).	**DMSP901SH**
Large sensor. Range up to 10m	**Range 0.35 to 10 mt. Process connections 1" BSP upper.** PVDF body with weather protection IP68, cable length as required (see table 3).	**DMSP902SH**
Large sensor. Range up to 15m	**Range 0.45 to 15 mt. Process connections 1" BSP upper.** PVDF body with weather protection IP68, cable length as required (see table 3).	**DMSP903SH**

Certification

TABLE 2

Description	Code
No Ex approval.	**N**
ATEX Intrinsically Safe certification: Ex II 1 G Ex ia IIB T6…T5 Ga (in progress)	**A**
FM/CSA Intrinsically Safe certification (for future use):	**U**

Cable Length

TABLE 3

Description	Code
2 x 0.5 mm^2 shielded cable, Ø7.5 mm: standard length 5m	**/5**
2 x 0.5 mm^2 shielded cable, □7.5 mm: 10m	**/10**
2 x 0.5 mm^2 shielded cable, □7.5 mm: 20m	**/20**
2 x 0.5 mm^2 shielded cable, □7.5 mm: 30m	**/30**

Installation

Installation Brackets: 1” BSP thread to fit all DMSP900 transmitters, for horizontal mounting off a supporting structure

Length: fixing point to transmitter	Model
200mm	DMBR021
500mm	DMBR051
700mm	DMBR071

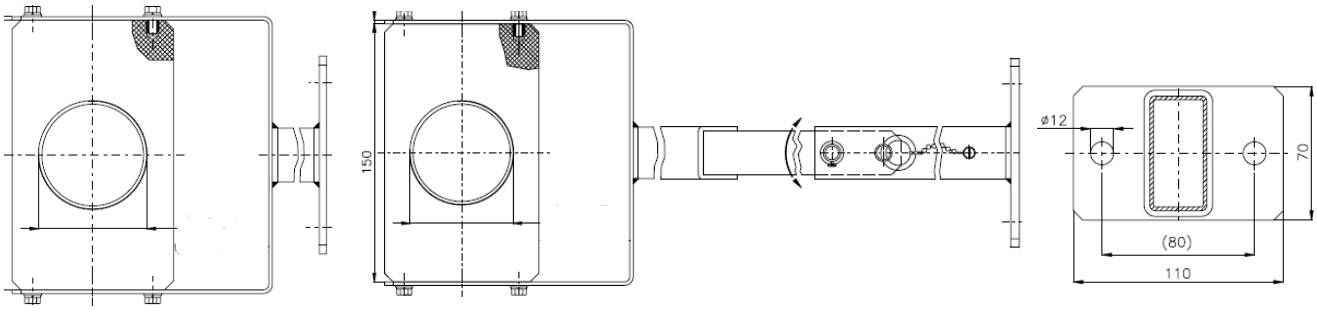

DMBR021 DMBR051 / DMBR071 DMBR0**

A range of flange adaptors are also available on request

Technical Specification

ULTRASONIC LEVEL TRANSMITTERS

DMSP90xSH

Ambient temperature **For Ex models**	-30 to 80°C (-22 to 176°F) -20 to 70°C (-4 to 158°F)
Process temperature **For Ex models**	-30 to 90°C (-22 to 194°F) -20 to 80°C (-4 to 176°F)
Operating Pressure (absolute)	0.5 TO 3 Bar (4.3 TO 43.5 psi)
RANGES	DMSP900SH = 0.25 to 6m (80kHz) DMSP901SH = 0.25 to 6m (80kHz) DMSP902SH = 0.35 to 10m (60kHz) DMSP903SH = 0.45 to 15m (40kHz) Beam angle: 5°
Accuracy	+/- (0.2% of distance + 0.05% of range)
Resolution (acc. to range)	<2 m: 1 mm, 2 to 5 m: 2 mm 5 to 10 m: 5 mm, >10m: 10mm
Power Supply	13.4 to 36 V DC – 48 to 720 mW
LED indication	Red/Green on connector
IP rating	IP68
Electric protection	Class III
Cable	2 -core
Process connections (refer dimensional drawings on p4)	Range 6m: Upper: 1” BSP Lower: 2” BSP or NPT Range 10m: Upper 1” BSP Range 15m: Upper 1” BSP
Programming	HART protocol
Weight (with 3m of Cable)	1.2 Kgs (with 3mt cable)

Approvals

EUROPEAN DIRECTIVES

Low voltage Directive (LVD) 2014/35/EU.
Compliant to LVD

Pressure Equipment Directive (PED) 2014/68/EU:
This product is outside the scope of the PED directive

Dimensions

GENERAL DIMENSIONS		
DSMP900SH & DMSP901SH Range up to 6m	DMSP902SH Range up to 10m	DMSP903SH Range up to 15m
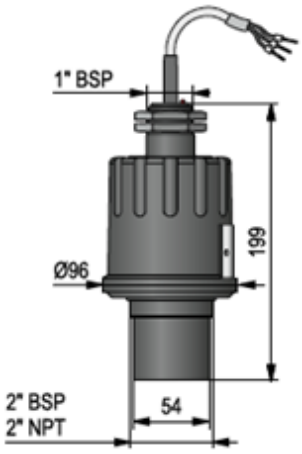	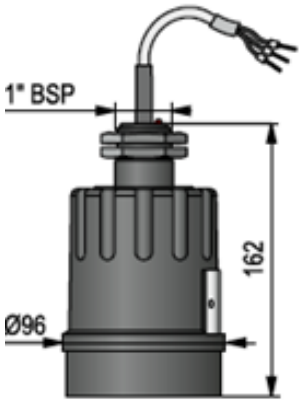	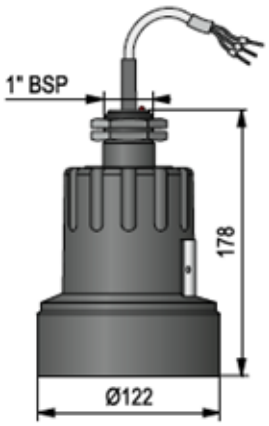

Special Engineering

For these instruments, we have many other options already designed and configured, for example:
- PP body
- Alternative cables, including low smoke or halogen free.

Other options can also be designed to meet specific requirements of an application. Please contact us for further information.

ISO9001
FM00720

Technical **Datasheet**

delta-mobrey

Ultrasonic Transmitters

Liquid Level & Flow Measurement

Series : DMSP400 and DMSP500

Key **Features**

- Non-contact, continuous measurement of Level, Contents or Open Channel Flow
- Local LCD display and push button menu for parameter display, configuration and diagnostics
- Two wire loop powered 4-20mA with HART® output
- Integral relay output option
- Speed of sound temperature compensation
- Configure to ignore disturbing object false echo
- IP67/68 construction
- Plastic, or painted aluminium enclosure

Series Overview

The Delta Mobrey DMSP400 and DMSP500 Series is a liquid level transmitter based on ultrasonic technology that is suitable for many liquid applications. Integral LCD display with push button controls and menu greatly simplify configuration and diagnostics.

Ultrasonic pulses are transmitted to and reflected from the liquid surface. The measured 'time-of-flight' determines the distance to the surface. By configuring the distance to the bottom of a vessel, the transmitter can calculate the liquid level and contents (volume) for linear or non-linear vessels (cylindrical, domed, spherical, etc). For open channel flow, the transmitter can calculate the flow rate from the level for a wide variety of flumes and weirs.

An internal temperature sensor compensates for temperature affects. The level, contents or flow measurement is available on the 4–20 mA and HART output. Can easily interface with the DMCU900 HART® controller for local display and complex pump control.

Other products

Other products we can offer :

• Compact Ultrasonic Level transmitters and Control Unit

• Submergible type level transmitters

Product **applications**

- Level or contents measurement in storage tanks
- Wet wells, sumps, pumping station pump control
- Pump control for feeder tanks
- High or low level alarms in storage tanks
- Small or thin wall tanks
- Open channel flow
- Chemical or Hydrocarbon storage tanks

Liquid Level & Flow Measurement

Model: DMSP400 and DMSP500

How to order

Instrument can be configured by selecting codes representing the desired features from the tables that follow.

The chart below, describes how the model code is built up. For assistance in configuring a switch that best suits your needs, please contact your local sales office.

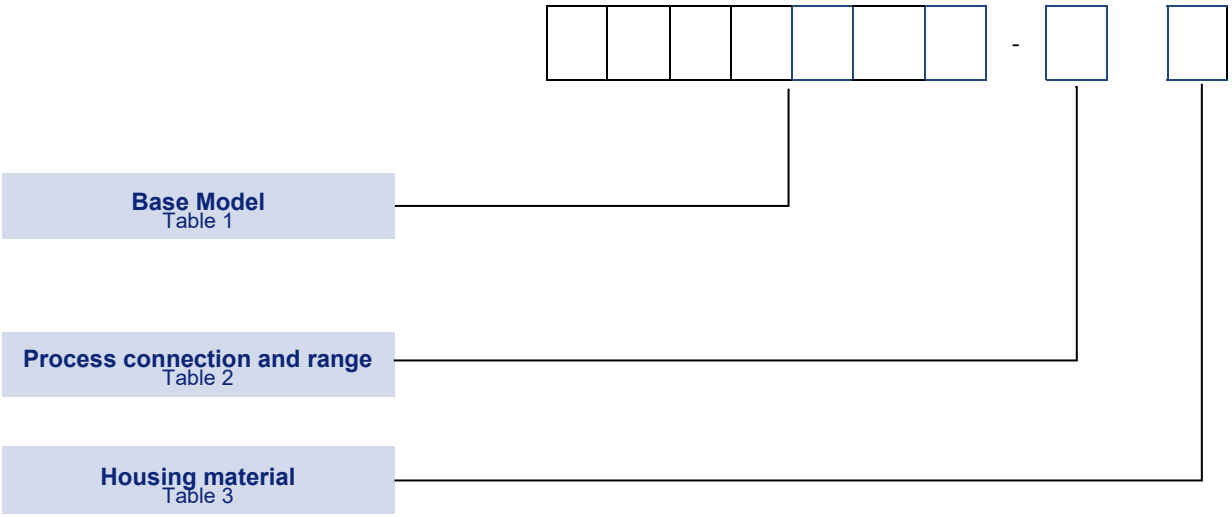

Models

TABLE 1 | | | | | | | | - | | |

Level, contents and flow. Range dependent on process connection

Description	Code
Standard model, 4-20mA output, 2 wire loop powered	**DMSP422**
Relay output, 4-20mA and HART comms, 2 wire loop powered (4 wires if using relay)	**DMSP400**
Ex certified 4-20mA and HART comms, 2 wire loop powered Ex II 1 G Ex ia IIB T6…T4 Ga	**DMSP500** **(replaces MSP900GH)**

Process Connection and Range

TABLE 2 | | | | | | | | - | | |

Process connection and range		Code
1-1/2” BSP	Range: 0.20m to 4 m	**A**
1-1/2” NSP		**C**
2” BSP	Range: 0.25m to 6 m	**B**
2” NPT		**N**
2” BSP	Range: 0.35m to 8 m	**D**
2” NPT		**E**
DN80 PN16	Range: 0.35m to 10 m	**F**
3” ANSI 150		**G**
DN125 PN16	Range: 0.45m to 15 m	**J**
5” ANSI 150		**K**
DN150 PN16	Range: 0.45m to 15 m	**L**
6” ANSI 150		**M**
DN150 PN16	Range: 0.60m to 25 m	**P**
6” ANSI 150		**Q**

Housing Material

TABLE 3 | | | | | | | | - | | |

Sensor material : PVDF

Description	Code
PLASTIC (PBT)	**8**
ALUMINIUM PAINTED	**9**

Technical Specification

DMSP400 / 500
ULTRASONIC LEVEL, CONTENTS AND FLOW TRANSMITTER

DMSP400/500

Operating Pressure (absolute): 0.5 TO 3 bar (7.3 to 43.5 psia)

Operating Temperature and Ambient (plastic housing)
Ambient (aluminium housing)

	DMSP422 / DMSP400	DMSP500
Ambient (plastic housing)	-30°C to 90°C (-22 to 194°F)	-20°C to 80°C (-4°F to 176°F) T6
	-25°C to 70°C (-13 to 158°F)	-20°C to 70°C (-4°F to 156°F)
Ambient (aluminium housing)	-25°C to 70°C (-13 to 158°F)	-25°C to 70°C (-13°F to 156°F)

Display: 6 digit LCD display

Ranges: From 0.25m to 25m depending on model. Further ranges available on request.

Transducer specifics

Range	Process connection	Beam angle	Frequency
0.2m to 4m	1-1/2 ”BSP/NPT	6°	80 kHz
0.25m to 6m	2” BSP/NPT	5°	80 kHz
0.35m to 8m	2” BSP/NPT	7°	60 kHz
0.35m to 10m	3” Flanged	5°	60 kHz
0.45m to 15m	5” Flanged	5°	40 kHz
0.6m to 25m	6” Flanged	7°	20 kHz

Accuracy: ± (0.2% of measured distance +0.05% of range)

Resolution (acc. to range):
<2 m: 1 mm
2…5 m: 2 mm
5…10 m: 5 mm
>10 m : 10mm

Wiring configuration: 2 wires (or 4 wires when using relay output)
Alarm switching function: 1 SPDT, 30 V DC, 1 A DC connected in parallel (DMSP400 only)
Analog + digital Output signal: 4-20mA + HART®
Power Supply: 12 to 36 V DC 48mW—720mW DMSP500: 12—30 V DC 48mW—600 mW
IP rating: IP67/68 (housing/sensor)
Ex marking (DMSP500 only): Ex II 1 G Ex ia IIB T6…T4 Ga
Intrinsically safe data: Ci ≤ 15 nF, Li ≤ 200 µH, Ui ≤ 30 V, Ii ≤ 140 mA, Pi ≤ 1 W
Electric protection: Class III with DC power supply;
Electrical connection: 2x M20x1.5 cable glands + internal thread for 2x ½" NPT cable protective pipe,
Terminal board: For wire cross section max 1.5 mm² (AWG15)
Process connection: See range and sensor size
Weight (with 3m of Cable): 1.3 - 2.3 Kgs

Special Engineering

Many other options already designed and configured, for example:
- Stainless Steel sensor
- Special construction

Other options can also be designed to meet specific requirements of an application. Please contact us for further information.

Installation Accessories

Installation Brackets for horizontal mounting off a tank wall or supporting structure.

Available with 1 1/2” or 2” threads to fit DMSP400 and DMSP500 transmitters with threaded connections.

Connection	Model option	200mm length	500mm length	700mm length
1 1/2” BSP	A	DMBR022	DMBR052	DMBR072
1 1/2” NPT	C	DMBR023	DMBR053	DMBR073
2” BSP	B, D	DMBR024	DMBR054	DMBR074
2” NPT	N, E	DMBR025	DMBR055	DMBR075

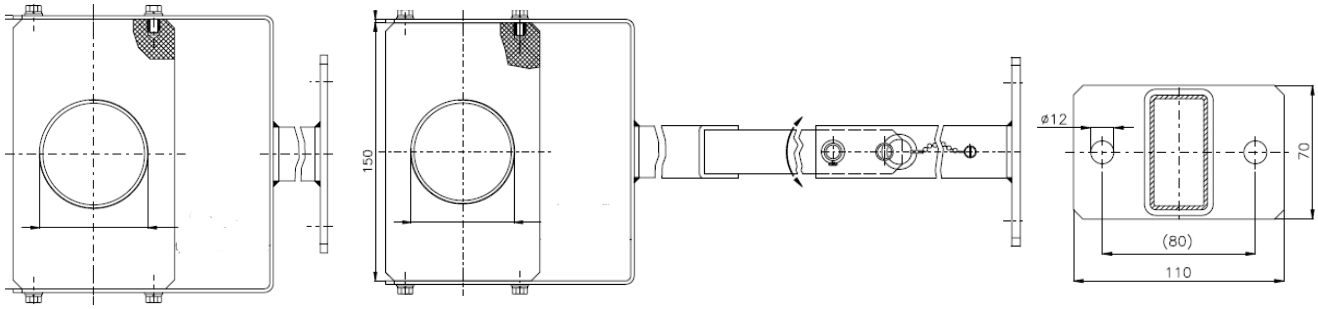

DMBR02* DMBR05* / DMBR07* DMBR0**

A range of flange adaptors are also available on request

Approvals

EUROPEAN DIRECTIVES

Electromagnetic Compatibility Directive (EMC) 2014/30/EU
Compliant to EMC directive

Pressure Equipment Directive (PED) 2014/68/EU:
This product is outside the scope of the PED directive

ATEX Directive 2014/34/EU

Intrinsically Safe:

Certificate No. BKI20ATEX0019 X

EN 60079-0, EN 60079-11

For Zone 0 models (Code DMSP500, see Table 1)

II 1 G Ex ia IIB T6...T4 Ga
With plastic housing (-20°C ≤ Ta ≤ +70°C)
With metal housing (-30°C ≤ Ta ≤ +70°C)
With display (-25°C ≤ Ta ≤ +70°C)

Dimensions

Sensor dimensions		
1-1/2” Process connection. 4m Range Sensor diam. 42mm	2” Process connection. 6m Range. Sensor diam. 54mm	2” Process connection. 8m Range. Sensor diam. 54mm
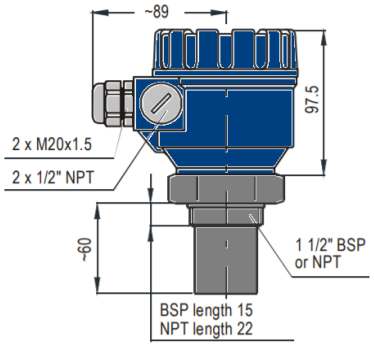	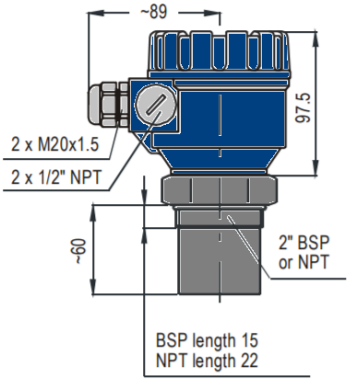	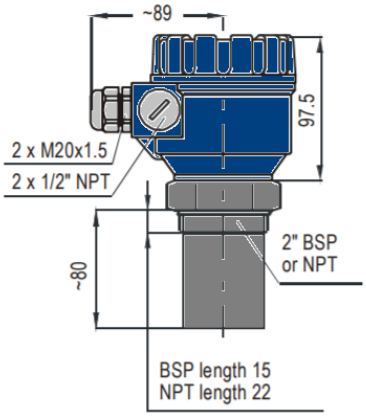
3” / DN80 flanged connection: 10m Range Sensor diam. 74mm	5” / DN125 flanged connection: 15m Range Sensor diam. 122mm	6” /DN150 flanged connection. 25m Range Sensor diam. 148mm
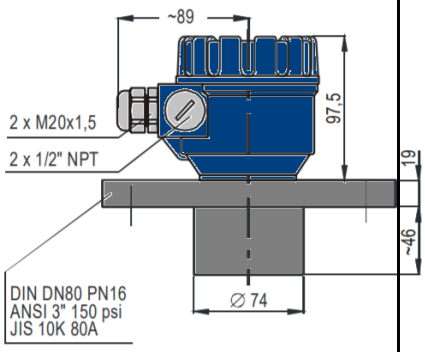	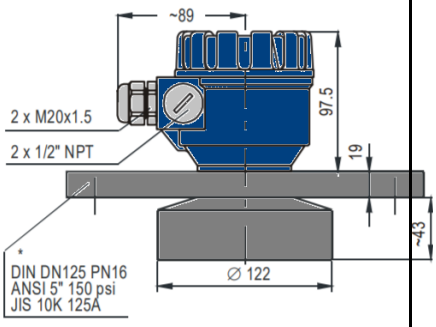	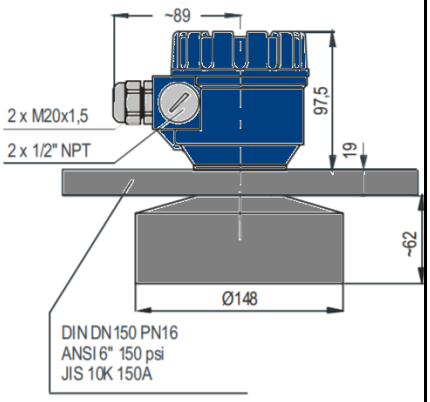

ISO9001
FM00720

Technical **Datasheet**

delta-mobrey

D Series

Hydrostatic level probes DSGE-25 and DSGE-16

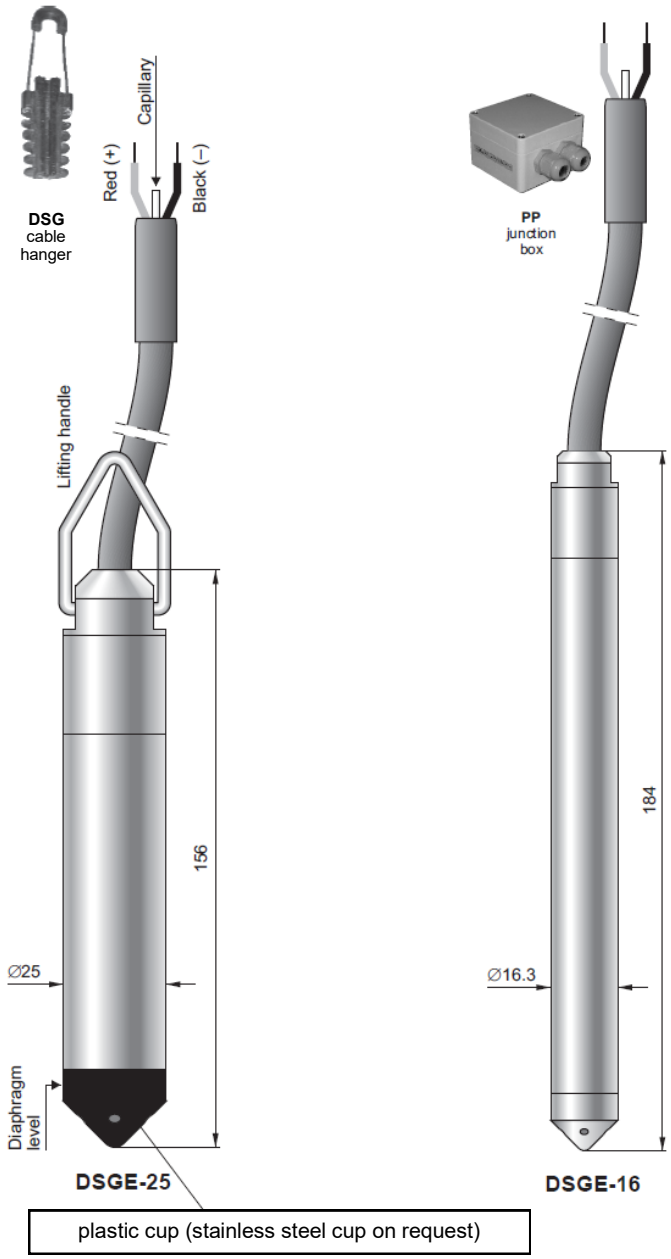

Key **Features**

- Any measurement range from 1 up to 500 m H_2O.
- Integrated internal overvoltage protection circuit.
- Excellent repeatability 0.05%

Application & Function

The DSGE-25 hydrostatic level probe is applicable to measure liquid levels in tanks, deep wells or piezometers.
The DSGE-16 probe is a specialized device designed to measure water levels in narrow diameter piezometers or wells.

The probe measures liquid levels, basing on a simple relationship between the height of the liquid column and the resulting hydrostatic pressure. The pressure measurement is carried out on the level of the separating diaphragm of the immersed probe and is related to atmospheric pressure through a capillary in the cable.
The active sensing element is a piezoresistant silicon sensor separated from the medium by an isolating diaphragm. The electronic amplifier, which works in combination with the sensor, and is meant to standardize the signal, is additionally equipped with an overvoltage protection circuit, which protects the probe from damage caused by induced interference from atmospheric discharges or from associated heavy current engineering appliances.

When lowered to the reference level, the probe may either hang freely on the cable or lie on the bottom of the tank. The cable with the capillary can be extended using a standard signal cable. For the cable connection a special DSG cable hanger is recommended. The cable connection should be situated in a non-hermetically sealed box (the internal pressure inside the box should be equal to the atmospheric pressure), preventing water or other contaminants from getting into the capillary. The PP junction box is recommended for systems with long signal transmission lines, it is recommended also the use of an additional UZ-2 overvoltage protection circuit in the form of a wall-mounted box which allows the cables connection. When the probe cable is being wound up, the minimum winding diameter should be 30cm and the cable should be protected from mechanical damage.
If there is a possibility of turbulence in the tank (for example, because of the mixer operating mixers or a turbulent inflow), the probe should be installed inside a screening tube (e.g. made of PVC). If the probe is to be lowered deeper than 100m, the cable should be hanged at steel lifting rope. Cleaning the probe diaphragm by mechanical means is strictly prohibited.

Technical data DSGE-25

Measuring range
Any measuring range 1 ÷ 500 m H_2O (the standard ranges: 4, 10, 25, 60, 100 m H_2O are recommended)

	Measuring Range		
	1 m H_2O	**4 m H_2O**	**0...10 m H_2O ÷ 500 m H_2O**
Overpressure Limit (repeatable – without hysteresis)	40 x range	25 x range	10 x range (max. 700 m H_2O)
Accuracy % FSO acc. to IEC 60770	0,6%	0.3%	0,2%
Accuracy % FSO acc. to BFSL	0,3%	0,15%	0,1%
Thermal error	Typical 0,3% / 10°C max 0,4% / 10°C		Typical 0,2% / 10°C max 0,3% / 10°C

Long term stability 0,1% or 1 cm H_2O for 1 year
Hysteresis, repeatability 0,05%
Thermal compensation range 0 ÷ 40°C – standard
-10 ÷ 70°C – special version

Medium temperature range -25 ÷ 40°C – standard
0 ÷ 75°C – ETFE and PTFE version

CAUTION: The medium must not be allowed to freeze in the immediate vicinity of the probe

Technical data DSGE-16

Measurement ranges 10 ÷ 100 m H_2O
Overpressure limit 10 x range
(repeatable - without hysteresis)
Accuracy 0,3%

Hysteresis, repeatability 0,05%
Thermal compensation range 0 ÷ 40°C
Process temperature limit 0 ÷ 40°C
(version with ETFE and PTFE cable) 0 ÷ 75°C

Electrical parameters

Output signal, power supply:

No	Signal type	Power supply	Available on models
1	4 ÷ 20mA	8…36 VDC 10,5…36 VDC (TR version)	DSGE-25/...
2	0 ÷ 10V	13...30 VDC	DSGE-25/...
3	0 ÷ 3.3V	4,1...14,1 VDC	DSGE-25/...
4	0 ÷ 5V 0,5 ÷ 4,5V	8...14,1 VDC	DSGE-25/...
5	4 ÷ 20mA	8...36 VDC	DSGE-16/...
6	0 ÷ 3.3V	3,6...4,5VDC	DSGE-16/...

Load resistance (for current output)

$$R[\Omega] \leq \frac{U_{sup}[V] - 8V}{0{,}02A}$$

Load resistance (for supply output) $R \geq 20k\Omega$

Error due to supply voltage changes 0,005% / V
Degree of protection IP68
Material of casing SS316L
Cable shield PU, ETFE, PTFE

Material of diaphragm
DSGE-25 Hastelloy C276 (optionally SS316L)
DSGE-16 SS316L

How to Order

Model	Code	Description
DSGE-25 **DSGE-16**		Level probe
Versions, * - applicable only for DSGE-25	/-10÷70° *…… /Pt100…… /TR *…… /316L.....	Extended thermal compensation range Probe with Pt100 sensor (only with PU cable) Response time <30ms (only for 4...20mA output) Membrane material: 316L
Measuring range	/…÷…(required units)	Calibrated range in relation to 4mA and 20mA (or 0V and 10V) output
Output signal	4...20mA …… /0÷10V….... /0÷3,3V….... /0÷5V…..... /0,5÷4,5V.....	4…20mA / power supply DSGE-25: 8…36VDC (TR 10,5…36VDC) DSGE-16: 10,5…36VDC /0…10V / power supply 13…30VDC /0…3,3V / power supply DSGE-25: 4,1…14,1VDC, DSGE-16: 3,6…4,5VDC /0…5V / power supply 18…14,1VDC /0,5..4,5V / power supply 18…14,1VDC
Type of cable	/PU…… /PU PZH…….. /ETFE…… /ETFE-R…… /PU + PTFE…… /ETFE + PTFE……	Polyurethane cable (medium temp. up to 40°C) Polyurethane, halogen free cable with hygienic certification (medium temp. up to 40°C) ETFE cable (not suitable for mineral oil products, medium temp. up to 75°C) ETFE cable with Viton/silicon sealing (suitable for mineral oil products, medium temp. up to 40°C) Polyurethane cable with PTFE shielding (medium temp. up to 75°C) ETFE cable with PTFE shielding (medium temp. up to 75°C)
Cable length	/L=...m……..	Cable length
Accessories	/DSG …… /PP ……	Cable hanger Junction box

Алматы (7273)495-231
Ангарск (3955)60-70-56
Архангельск (8182)63-90-72
Астрахань (8512)99-46-04
Барнаул (3852)73-04-60
Белгород (4722)40-23-64
Благовещенск (4162)22-76-07
Брянск (4832)59-03-52
Владивосток (423)249-28-31
Владикавказ (8672)28-90-48
Владимир (4922)49-43-18
Волгоград (844)278-03-48
Вологда (8172)26-41-59
Воронеж (473)204-51-73
Екатеринбург (343)384-55-89
Иваново (4932)77-34-06
Ижевск (3412)26-03-58
Иркутск (395)279-98-46
Казань (843)206-01-48
Калининград (4012)72-03-81
Калуга (4842)92-23-67
Кемерово (3842)65-04-62
Киров (8332)68-02-04
Коломна (4966)23-41-49
Кострома (4942)77-07-48
Краснодар (861)203-40-90
Красноярск (391)204-63-61
Курск (4712)77-13-04
Курган (3522)50-90-47
Липецк (4742)52-20-81
Магнитогорск (3519)55-03-13
Москва (495)268-04-70
Мурманск (8152)59-64-93
Набережные Челны (8552)20-53-41
Нижний Новгород (831)429-08-12
Новокузнецк (3843)20-46-81
Ноябрьск (3496)41-32-12
Новосибирск (383)227-86-73
Омск (3812)21-46-40
Орел (4862)44-53-42
Оренбург (3532)37-68-04
Пенза (8412)22-31-16
Петрозаводск (8142)55-98-37
Псков (8112)59-10-37
Пермь (342)205-81-47
Ростов-на-Дону (863)308-18-15
Рязань (4912)46-61-64
Самара (846)206-03-16
Саранск (8342)22-96-24
Санкт-Петербург (812)309-46-40
Саратов (845)249-38-78
Севастополь (8692)22-31-93
Симферополь (3652)67-13-56
Смоленск (4812)29-41-54
Сочи (862)225-72-31
Ставрополь (8652)20-65-13
Сургут (3462)77-98-35
Сыктывкар (8212)25-95-17
Тамбов (4752)50-40-97
Тверь (4822)63-31-35
Тольятти (8482)63-91-07
Томск (3822)98-41-53
Тула (4872)33-79-87
Тюмень (3452)66-21-18
Ульяновск (8422)24-23-59
Улан-Удэ (3012)59-97-51
Уфа (347)229-48-12
Хабаровск (4212)92-98-04
Чебоксары (8352)28-53-07
Челябинск (351)202-03-61
Череповец (8202)49-02-64
Чита (3022)38-34-83
Якутск (4112)23-90-97
Ярославль (4852)69-52-93

Россия +7(495)268-04-70
Казахстан +7(7172)727-132
Киргизия +996(312)96-26-47

www.delta-mobrey.nt-rt.ru || dye@nt-rt.ru